EPoX COMPUTER CO.,LTD.
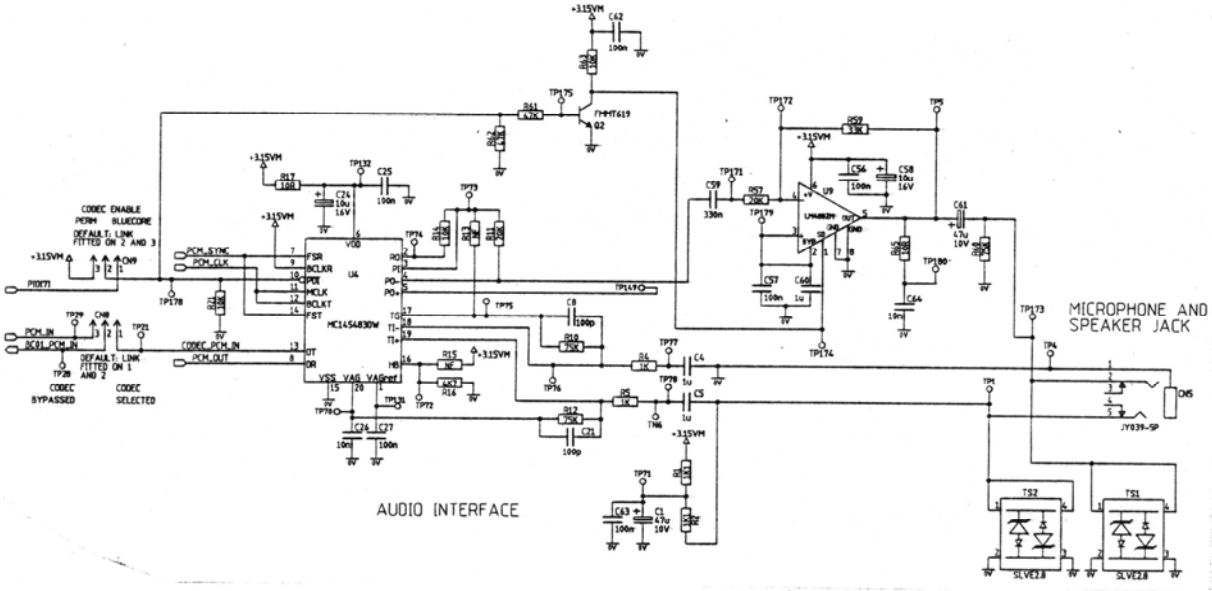
Audio circuit for Module Products